Workbench Audio Amplifer

INTERMEDIATE SKILL LEVEL

Features:

- Mains powered
- Option to power from a 12v PSU
- 3-Band graphic equaliser
- 5 watt audio output IC
- Built on pre-amplifier.
- Supports direct input to power amplifier stage.
- Thermal overload and short-circuit projection for the audio power amp

Issue 2– 27th March 2013

A workbench, mains powered audio amplifier

This project describes the construction of a mains powered audio amplifier that will be a useful addition to any workbench.

It is assumed the constructor will construct the project as described with the in-built mains PSU. However, details will be given later on for those constructors who are not comfortable in building mains powered devices, to run the unit from a standard plug-in mains transformer power pack.

Mains electricity can be lethal. Do not attempt construction of the mains PSU board unless you are competent to do so !!

The project consists of two PCBs (Printed Circuit Boards). One is the optional PSU board, and the other contains main pre-amplifier, graphic equaliser and audio power amplifier stages.

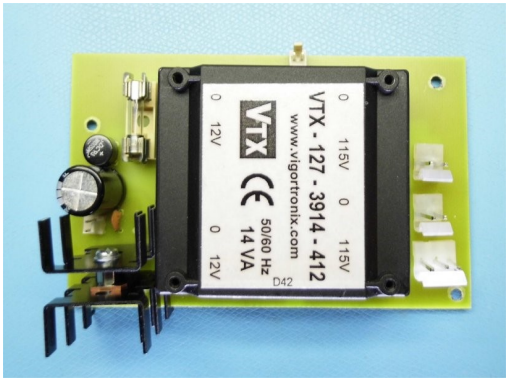

Fig 1. Completed mains PSU board

The PSU board is constructed as a separate board for safety reasons, and to enable the constructor to change the design to accommodate different transformer types if required more simply.

PSU CIRCUIT DESCRIPTION

The three Molex connectors on the right of the PCB are used for the mains power connection, and to enable simpler connection of the on/off switch. Mains power should enter the project case via a suitable 3-pole connector.

The transformer used has two 12v secondary windings and these are wired in parallel to provide maximum amperage. The 12v AC is fed via a fuse to be rectified and smoothed by BR1 and C1. REG1 drops the input DC voltage to 12v, and presents this connector SK5 for onward connection to the main PCB. Capacitors C2 and C3 provide decoupling for the regulator.

Since there are a couple of largish capacitors in this project there is a sizable in-rush generated at switch-on as the capacitors charge. For this reason a 630ma slow-blow fuse should be used. This fuse will protect the transformer in the event of a short circuit. The transformer is capable of supplying around 850ma and the fuse used should not exceed this if full protection is to be afforded. Diode D1 will protect the regulator from the charge held in C13 which could in theory damage the regulator when the power is switched off.

An additional connection via SK4 is connected to a switch located on the front panel. This allows the negative 12v power rail to be "bonded" to the mains Earth; this can be useful in certain situations.

AUDIO CIRCUIT DESCRIPTION

The audio board is divided into three main parts; the pre-amplifier, equaliser and audio power amplifier.

Low-level audio is fed into the board via SK7. A facility for "phantom power" as needed by some microphones with built-in FET pre-amplifiers is provided by R1 and SW3. DC blocking is provided via C5 or C6; selection is made by SW4. IC2a (one half), R2, R3, R4, R10, R14 and C12 form a simple audio pre-amplifier. The gain of this pre-amplifier is controlled via VR2. The output of the pre-amp is either fed into the equaliser or directly into the audio power amplifier and controlled via SW5.

The equaliser stage is formed from the second half of IC2 and configured to operate in three frequency ranges; high 10Khz, medium (1KHz) and low (50Hz). The circuit is designed such that it produces approximately a +/-20 dB boost or attenuation for each of the three bands or ranges, controlled by VR3, VR4 and VR5 respectfully. The output of the equaliser stage is fed back to SW5.

The equalised audio signal (or raw audio if the equaliser is bypassed), is fed into the audio power amplifier stage via DC blocking capacitor C14 and VR1 which acts as the main volume control. VR1 also contains the power on/off switch.

Whilst the LM384 audio amplifier is rated at around 5 watts, this assumes the IC has a sufficient heat-sink and input voltage. Measurements on the prototype suggested that with the 12v drive voltage used into an 8ohm load, it was delivering around 1.5watts. This is still plenty of power for bench use.

Construction of PSU

If you intend to build the unit with the mains powered PSU, then construction should start here. Component soldering sequence isn't particularly important but its simpler to fit D1 before the 12 voltage regulator. Do observe correct polarity with BR1, C1, D1 and IC1.
It's also advisable to fit a heat-sink to the regulator as it can get rather warm during use.
Once assembled check very carefully for solder bridges or anything that could be shorting out any of the tracks, especially on or around the primary side of the transformer and SK1,2 & 3.

Initial testing of the PSU

The only real way the PSU can be tested is to hook it to a mains supply and switch on. For these types of tasks I have a mains cable with a 3-pin Molex connector attached, suitable for mating with SK1 and just for testing, I soldered two small bridge cables on the underside of the PCB connecting pin1 of SK2 to pin1 of SK3, and pin2 of SK2 to pin2 of SK3. Making sure the PCB isn't resting on anything conductive including tools or clippings from component leads, plug in the mains and switch on.
Using a multi-meter set for DC volts, carefully check the voltage at SK5. It should be approximately 12v DC. If not switch off immediately and check your work. Once completed, remove the mains plug from the wall socket and jumper wires.!

Construction of audio board

Like the PSU board, there is no special sequence to soldering in the components. You should use good quality IC sockets for IC2 & IC3, and it's advisable to use terminal pins for the VR, switch and audio connection points; this makes it simpler to solder the wire connections with the board firmly mounted in place.
Again, observe correct polarity for the IC sockets, and electrolytic capacitors.
LED1 should have two terminal pins inserted at it's location on the PCB so that the actual LED can be mounted on the front panel.

Case and Panel

The plastic case for this project originated from Rapid Electronics—Part No:30-4153. Since this amplifier isn't supposed to be of a high quality, it was felt that a plastic case would suffice. However, this could be replaced with a metal case for better noise immunity, however, if a metal enclosure is used it MUST be earthed.

The download file for this project contains a suggested front panel layout that is suitable for the above plastic case.

COMPONENT LIST

Resistors	
R1, R3, R4, R6, R9, R10, R13, R14, (8 off)	10K
R2, R5 (2 off)	1K
R7, R11 (2 off)	3.3K
R8, R12 (2 off)	1.8K
R15	3.3R
Capacitors	
C1	1000uf/35v
C13	1000uf/16v
C2, C3, C4, C5, C15, C17 (6 off)	100nf
C6, C14 (2 off)	2.2uf/63v
C7, C16 (2 off)	4.7uf/63v
C8	47nf
C9, C11 (2 off)	4.7nf
C10	22nf
C12	33uf/63v
C18	470uf/16v
Semiconductors	
IC1	7805 1A positive voltage regulator
IC2	LM358 op-amp
IC3	LM384 audio amp
BR1	50v / 1A rectifier W005
D1	1N4001 or equiv. 1A power diode.
LED1	5mm LED + bezel

Miscellaneous	
FUSE1	PCB mount fuse holder with 630ma slow blow fuse
T1	12v transformer. VTX-127-3914-412
VR1/SW1	10K LOG with 2-pole switch
VR2	5K LIN
VR3,VR4,VR5	50K LIN
SK1	3-way Molex 3.96mm
SK2,SK3	2-way Molex 3.96mm
SK4,SK5,SK6	2-way Molex 2.54mm
SW2,SW3,SW7	SPST
SW4,SW6	SPDT
SW5	DPDT
SK7,SK9,SK10	Panel mount phono socket.
SK8	1/4" headphone socket

For the mains input connection socket, a C14 fused 3-pole connector is ideal. i.e. Rapid Electronics part number: 23 -2100 (Inalways Part:0717-CW) You should also obtain a suitable insulation boot.

All resistors are 1/4 watt carbon-film unless otherwise specified. You will also require crimps for the Molex connectors, Molex plug shells, connecting wire, short piece of stereo microphone cable, heat shrink, IC sockets and the PCBs with mounting hardware.

Drill the front panel and mount the sockets, switches, VR's and LED as indicated in the Panel Layout diagram.

Next drill the rear panel and mount the mains power connector and SK9 for the speaker connection. Finally position the two PCBs (PSU PCB closest to the mains connection and drill holes in the enclosure base for the PCB mounting bolts and pillar supports.

Interconnect wiring

There's a fair amount of interconnect wiring to be done from the panels to the PCBs, so it's best to work through this task methodically.

First, the mains wiring. All connections to the mains chassis socket and the switch on the back of RV1 should be insulated with heat shrink sleeving. A suitable insulation boot should also be fitted over the rear of the mains chassis socket.

The three Molex 3.96mm connections should be crimped on. Make sure you use suitable mains rated cable for this part of the wiring harness, and if you are using a metal enclosure make sure that an earth is securely bolted to the chassis.

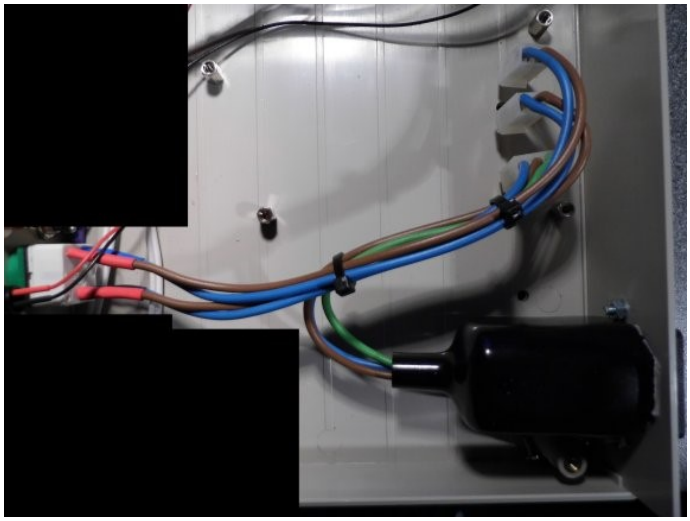

Fig 2. Mains wiring from chassis connector, to VR1/SW1 and Molex connectors.

Figure 2 shows the suggested layout for the mains wiring. Notice that both poles are used on VR1/SW1 so that both the mains Live and Neutral are switched. Also notice the insulation boot on the back of the chassis mains connection (bottom right). This mains connector socket also has an integral 1A fuse fitted.

Mount the audio board in the chassis, place the populated front panel face down in front of the chassis and connect each control in turn to the audio PCB. You should use a piece of twin screened microphone cable when making the connections between the SK7 (connect the two inner conductors together at both ends for SK7), VR1, and the audio PCB.

The remaining interconnections can all be made using standard 10/0.1 hook up wire.

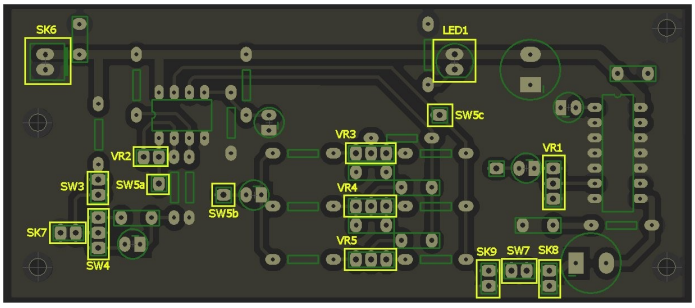

Fig 3. Audio PCB showing the connection points highlighted.

Figure 3 shows the connection points on the main audio board. If you've making your own PCB, you should drill these holes with a 1mm bit to allow accommodate the terminal pins.

You will also need to make a power interconnect cable that connects the PSU board with the audio board. Make sure you get the polarity correct !!

The connection to SK7 and VR1 should be made with short pieces of screened cable, making sure that the screen is connected to the left pin of SK7, and the lower pin of VR1.

Initial Tests

Once everything is assembled do a quick check to make sure that no strands of wire are touching places they shouldn't be and no component leads or other clippings are sitting on the PCBs or in the enclosure. Connect up the mains cable and switch on using VR1. The LED should illuminate immediately; if not, switch off and check the connections and the polarity of LED1. Using a multi-meter check that 12v is present around SK6 and it's the correct polarity.

If everything looks ok so far, switch off and connect a speaker to the amplifier output via SK9. Switch on and slowly increase the volume, you should hear a slight hiss or perhaps a soft buzzing. Now connect an audio source to the audio input SK10 (located to the left of the volume control). Make sure that SW6 is in the on position, and turn on the audio source. You should head the sound in the speaker and be able to adjust the volume using RV1.
If this doesn't work flip SW6 to check that it's not connected backwards.

Now reconnect the audio source to main input via SK7.
Rotate the pre-drive control to adjust the gain on the pre-amplifier. With SW5 (Bypass EQ) on, the three equaliser controls should have no affect. However switching off the bypass should allow you to experiment with the three filter controls.

Alternate PSU

For those constructors that do not wish to build the mains PSU board, the project will happily run from a standard 12v to 20v DC plug in power pack. You should make sure that the power pack is of the older type with a transformer and not a modern Switch-Mode type; they can create a lot of noise in the audio. The power pack should supply DC up to around an amp. If you experience hum or distortion at higher voltages, try connecting a 1000uf capacitor across the SK6; making sure the capacitor is rated at around 36v and connected the correct way around. Some cheaper power packs don't have much in the way of smoothing after the rectifier.

Conclusion

The amplifier described here was designed for use on the work bench. Whilst the sound quality isn't bad, it's far from "Hi-Fi", and it's very easy to overdrive the inputs or distort the output by increasing the gain too much, but these features are by design. For example, it's an interesting exercise to look at the output waveform on an oscilloscope whilst listening to the audio and over-drive the different stages to see and hear the affects of distortion.

Download Files

A download file is available for this project from the HobbyElectronics.net website.

It contains the original PCB foils and circuit diagrams in DipTrace format—A free version of DipTrace can be downloaded here.
It also contains additional images that should help during the construction.

PCB Holes

When making the PCBs, drill all component holes with a 0.8mm bit except for IC1, D1, BR1 and the points marked in figure 3. These should be drilled using a 1mm bit.

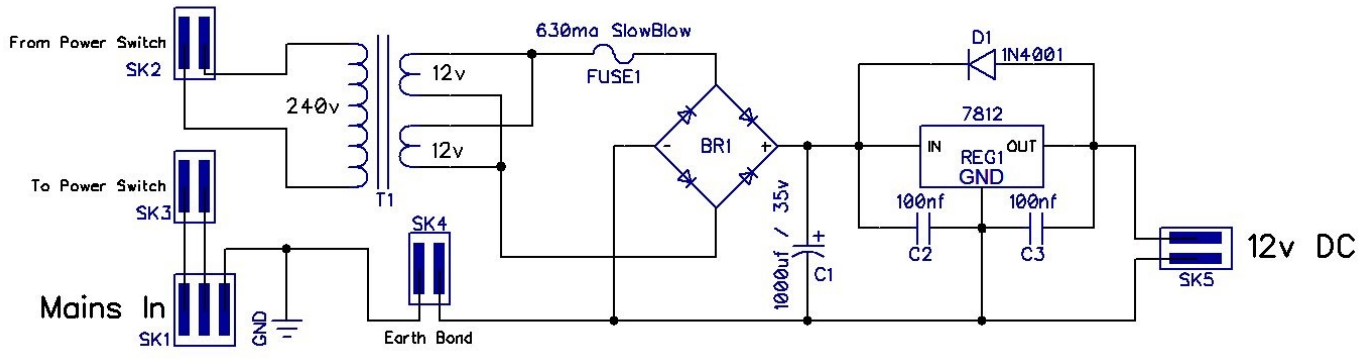

Fig 4. Mains PSU board circuit diagram.

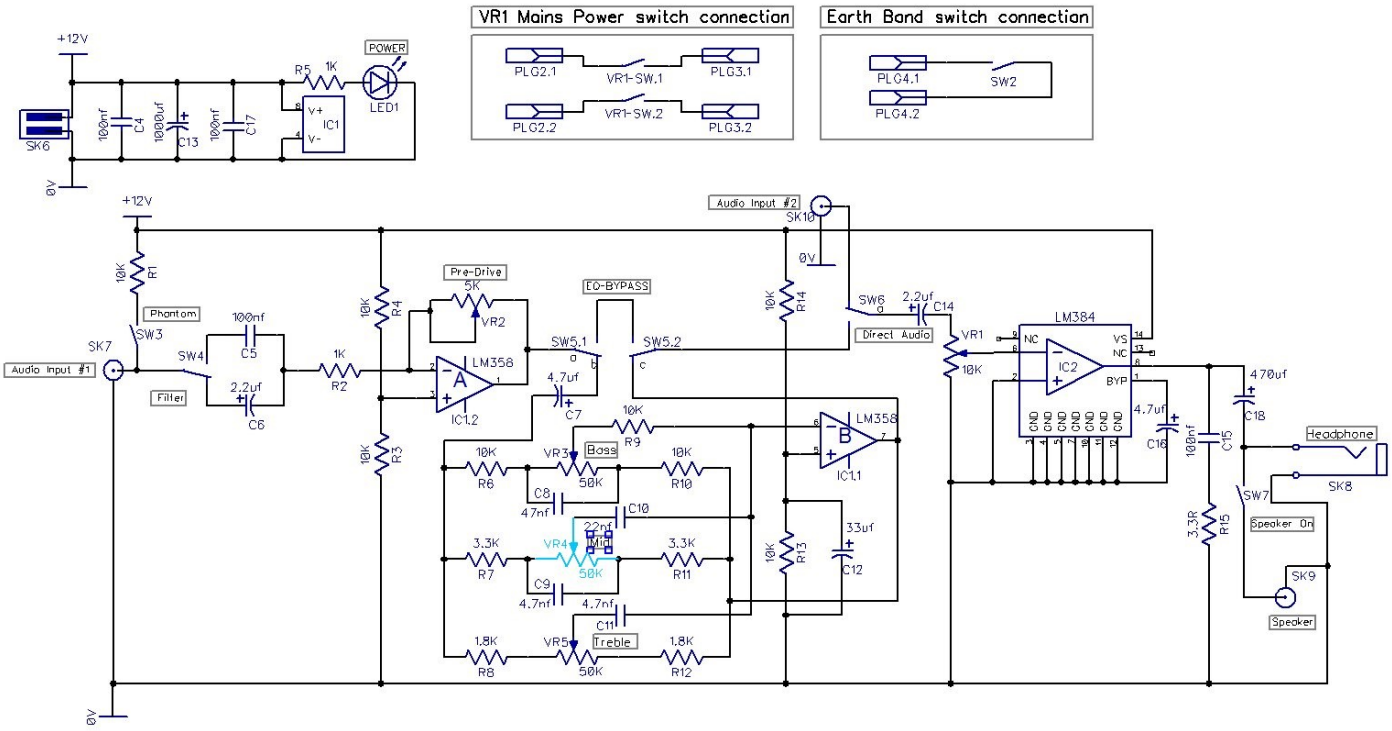

Fig 5. Audio board circuit diagram.

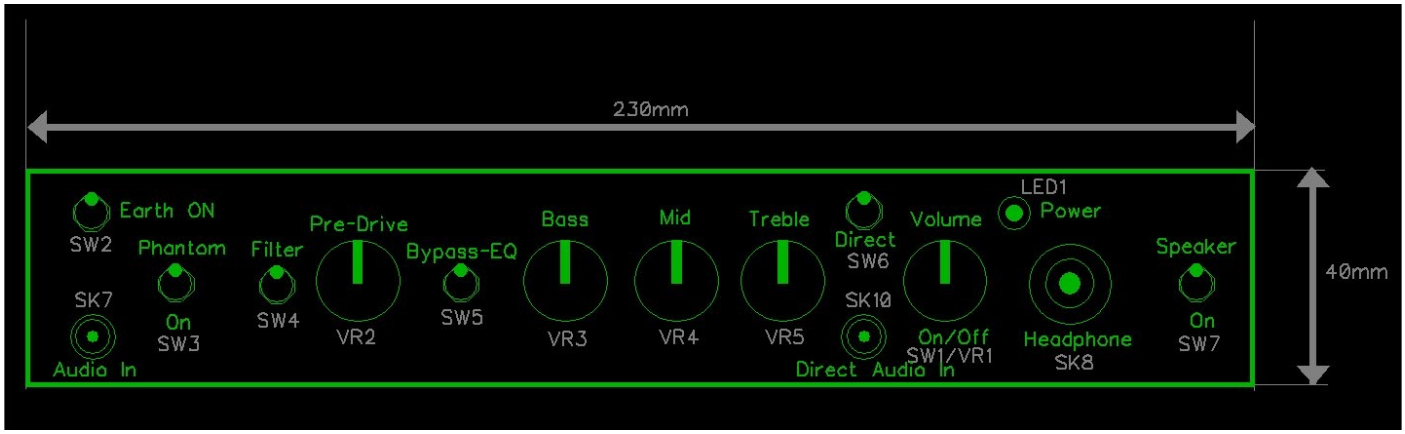

Fig 6. Suggested front panel layout.

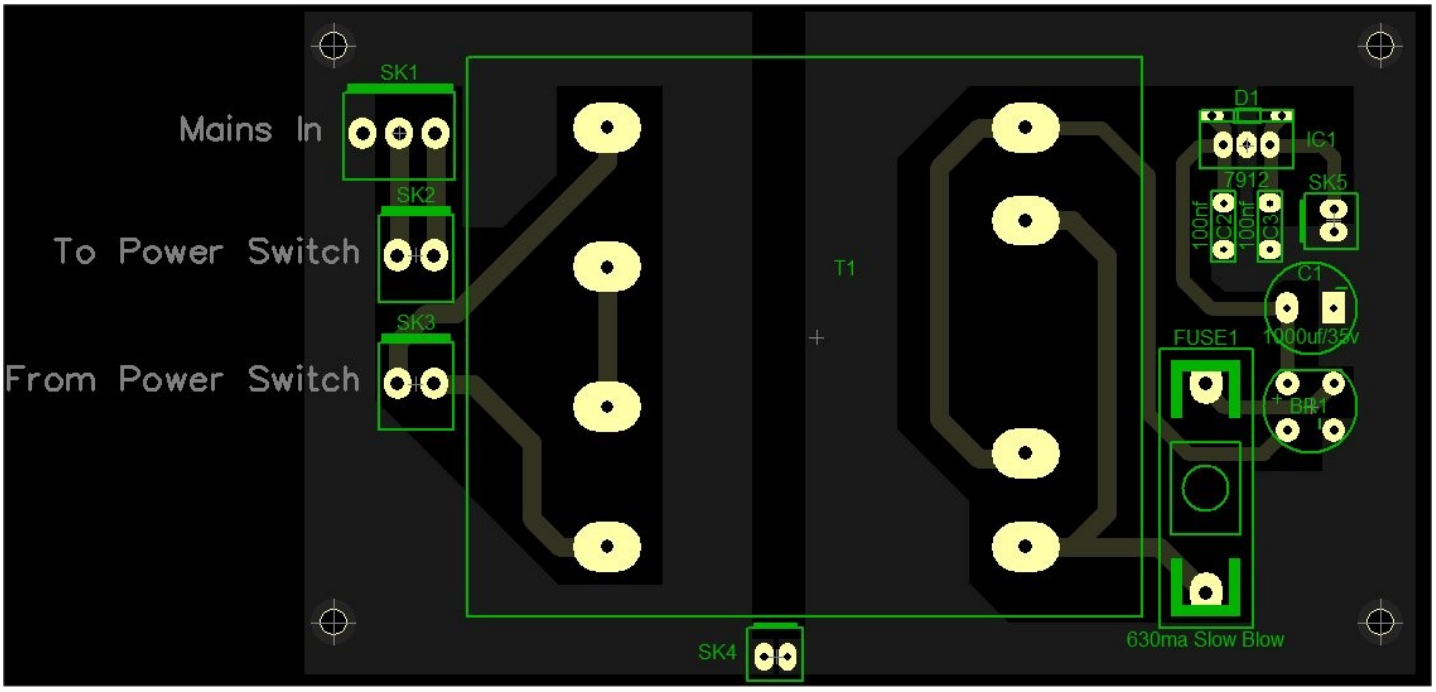

Fig 7. PSU PCB Foil

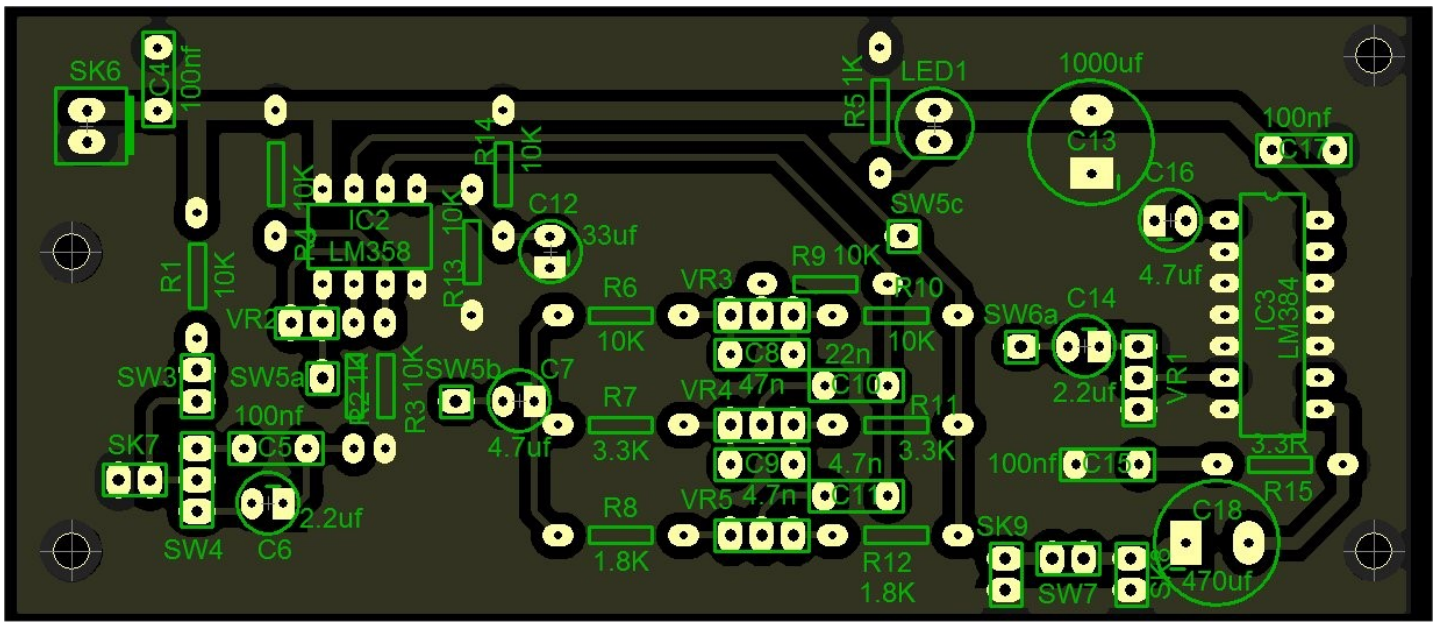

Fig 8. Audio Board PCB Foil

Fig 9. Completed project

Finding Parts & Substitutions

Most of the parts for this project were sourced from Rapid Electronics in the UK. When buying the Molex connectors, they sell several brands; some are MUCH cheaper than others !!! You will need to buy crimp sockets for the plugs as well. I tend to solder these rather than crimp.

Because the controls are mounted directly onto the front panel, you are free to move them around as you see fit. I arranged them in what I thought was a logical format and perhaps more importantly, to fit the plastic case I had available.

This was designed as a mains powered project. If you are uncomfortable with mains electricity, you could drop the PSU board, and power the project from one of these external plug-in PSU bricks. You will get a much better audio quality if the external PSU is of the older "transformer" type as opposed to a more modern SMPS (Switch Mode Power Supply) type. The SMPS types generate a lot of switching noise that is very difficult to remove completely.

This project would do well being housed in a metal enclosure to provide added screening against external interference. However, if you do elect to use a metal enclosure, it MUST BE EARTHED if you are using the suggested internal mains powered PSU board.

Useful Websites

LM358 Datasheet	www.ti.com/lit/ds/symlink/lm158-n.pdf
LM384 Datasheet	www.ti.com/lit/ds/symlink/lm384.pdf
7812 regulator datasheet	www.ti.com/lit/ds/symlink/lm7800.pdf
Free version of DIP trace for reviewing and printing the PCB and circuit diagrams	www.diptrace.com
Main hobby electronics web site	www.hobbyelectronics.net

If you've enjoyed this article, found any mistakes, have any comments, or just thought it was fantastic and want to drop me a line, please Email me at: hobbyelectronics@kcsl.uk.com